BugDorm-42260 Insect Cage (BD42260)

MegaView Science Co., Ltd.

http://BugDorm.com ・ http://MegaView.com.tw

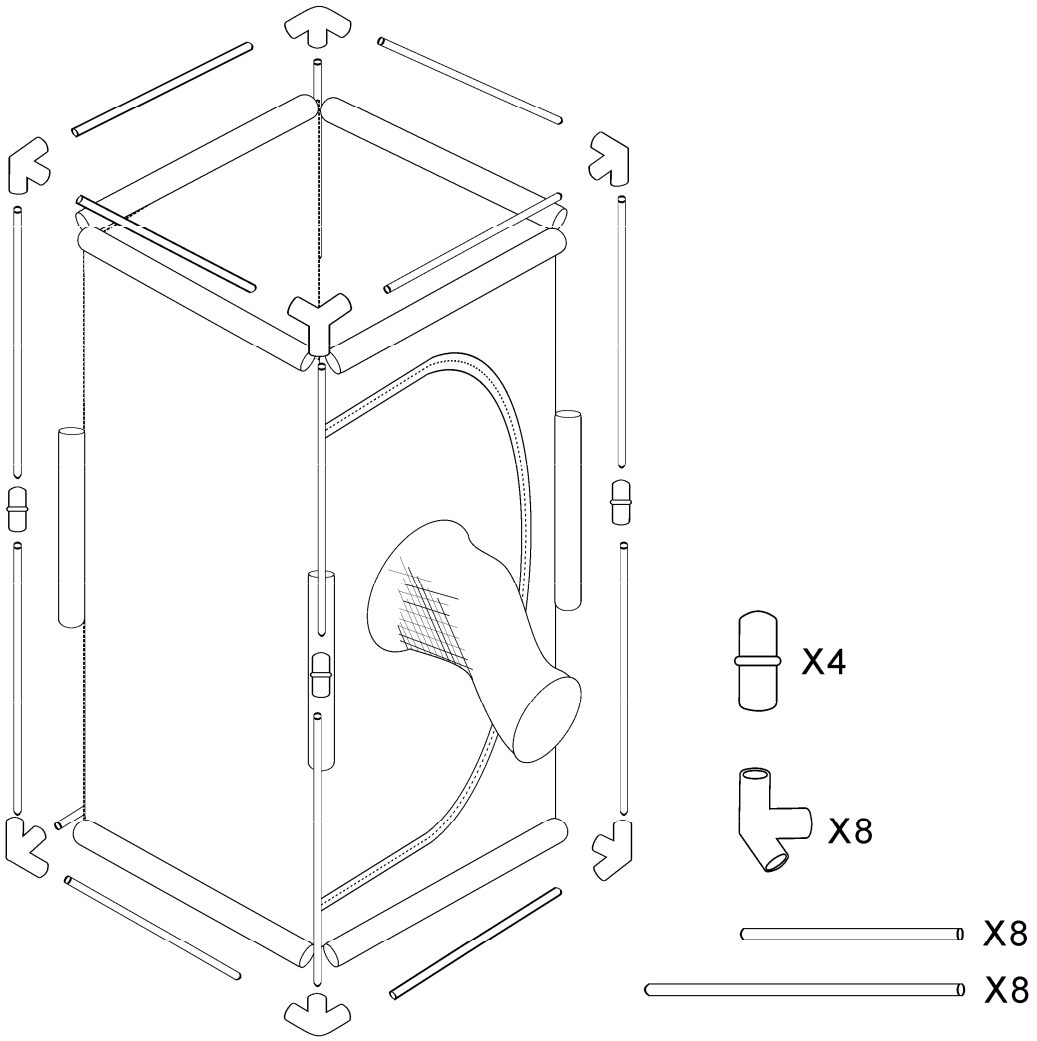

Package Contents

1 BugDorm
8 Short Poles
8 Long Poles
4 Two-Way Splints
8 Three-Way Splints

Assembly

1. Use four two-way splints to connect eight long poles into four poles.
2. Thread one pole from Step 1 into each of four long sleeves of BugDorm.
3. Thread remaining eight poles into short sleeves of BugDorm.
4. Connect poles with three-way splints.

Caution

※ Operating Temperature: -10 to 60°C

※ When trying to take the assembled cage apart, you may find a few poles locked in the splint. **Do not force them apart**, or you may rip the seam. Try to find a looser connection elsewhere.

Have any questions? Please email us: bugdorms@megaview.com.tw